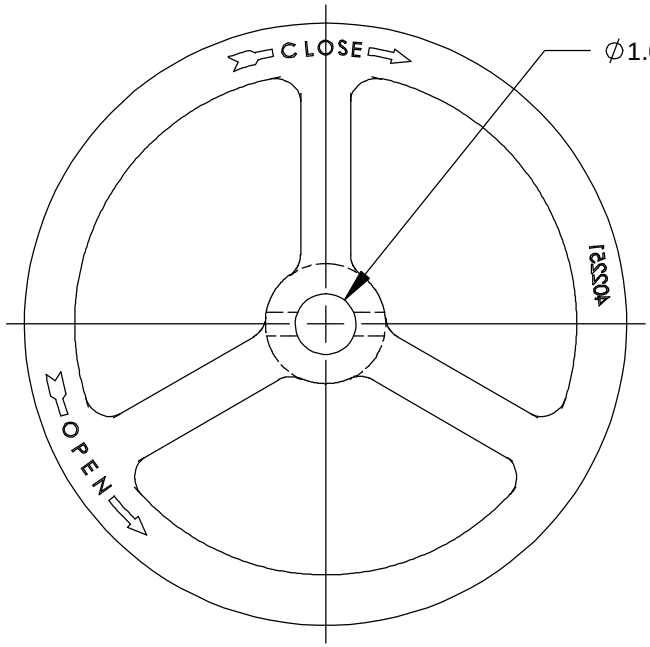

$\varnothing 1.010^{+.010}_{-.005}\left[25.65^{+0.254}_{-0.127}\right]$

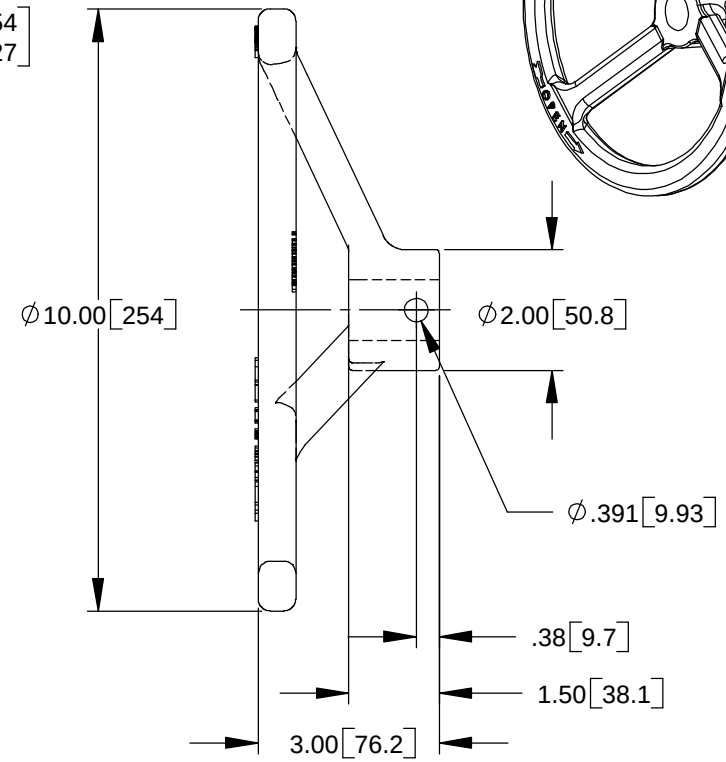

PAINT: BLACK EPOXY POWDERCOAT
CONSTRUCTION: DUCTILE IRON

NOTE: 1. MOUNTING HARDWARE INCLUDED.

REV	DESCRIPTION	BY	DATE	CHKD
A	REDRAWN IN SW ER# 12679	BJM	11/22/02	TWD

This drawing, the structural design disclosed therein and the technical data and engineering service represented thereby are the exclusive property of Dyna-Torque Incorporated. It is to be returned to Dyna-Torque upon written request and it is not to be reproduced in whole or in part or disclosed to anyone else without the express written consent of Dyna-Torque Incorporated.

TOLERANCE UNLESS NOTED
X ± .06
XX ±.02
XXX ±.005
DEGREE ± 1/2°

HW

DYNATORQUE
1934 EAST SHERMAN BLVD
MUSKEGON, MI 49444-1824
(231) 739-1377 FAX (231) 739-4514

NAME OF PART: HWCR10

NOTE

PART NO. 11-013 REV A